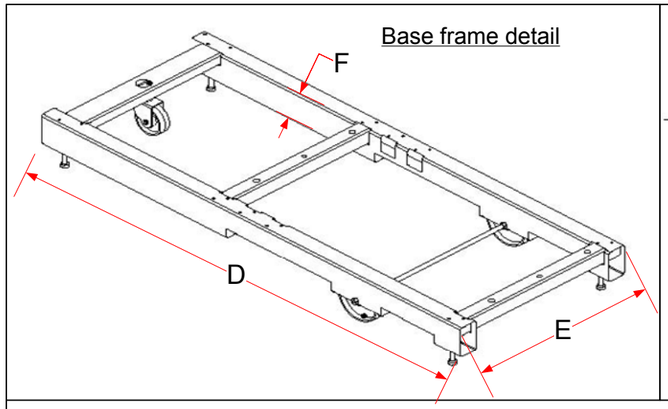

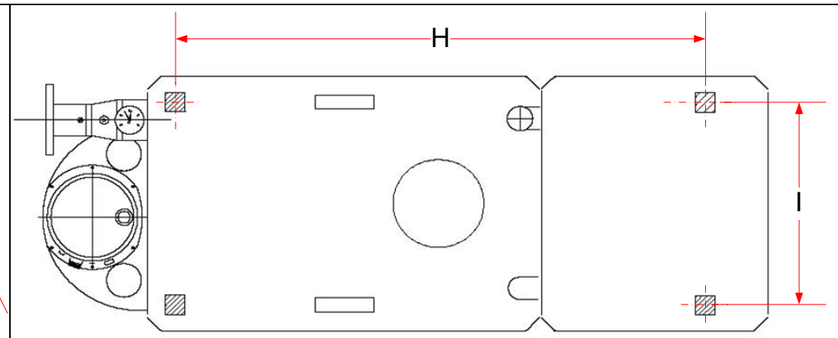

Base frame support points

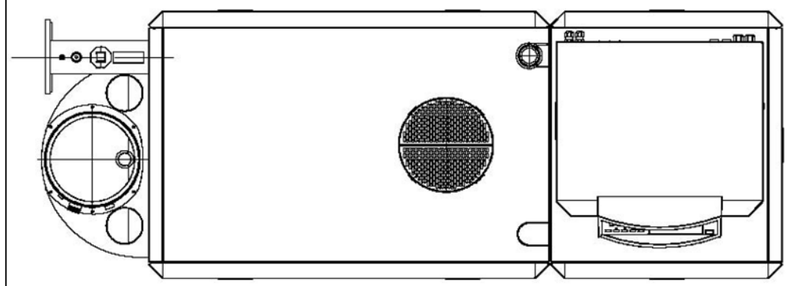

Plan View

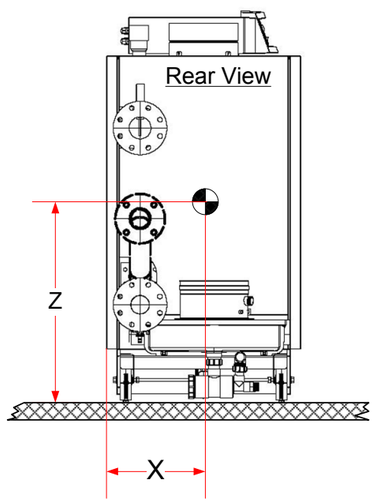

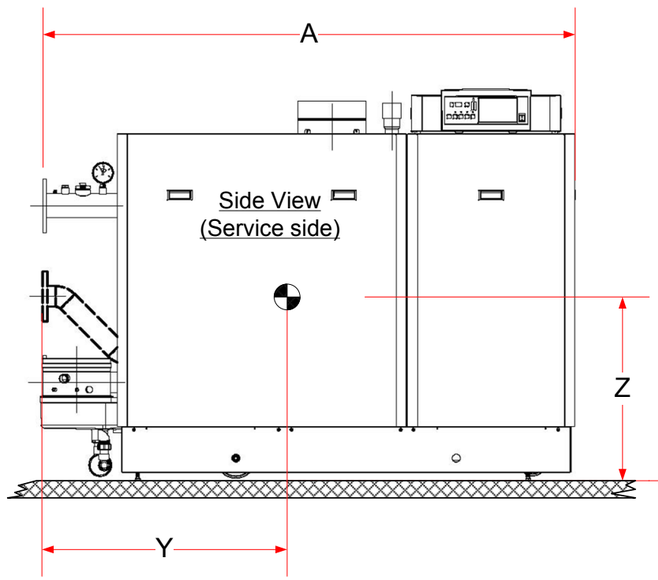

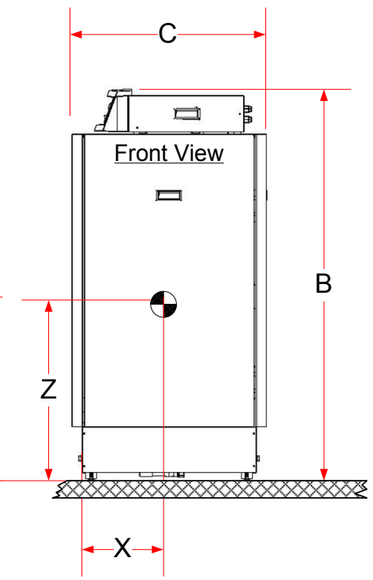

Boiler Model	Gas310-5		Gas310-6		Gas310-7		Gas310-8		Gas310-9	
	Inch	mm	Inch	mm	Inch	mm	Inch	mm	Inch	mm
A - Overall length	63	1600	63	1600	78.34	1990	78.34	1990	78.34	1990
B - Overall Height	57.38	1457	57.38	1457	57.38	1457	57.38	1457	57.38	1457
C - Overall Width	28.36	720.3	28.36	720.3	28.36	720.3	28.36	720.3	28.36	720.3
D - Base frame length	48.46	1231	48.46	1231	63.78	1620	63.78	1620	63.78	1620
E - Base frame width	25	635	25	635	25	635	25	635	25	635
F - Base frame height (max)	4.331	110	4.331	110	4.331	110	4.331	110	4.331	110
G - Boiler leg height (min)	2.75	69.85	2.75	69.85	2.75	69.85	2.75	69.85	2.75	69.85
H - Frame anchoring Center (length)	41.89	1064	41.89	1064	57.2	1453	57.2	1453	57.2	1453
I - Frame achoring center (width)	22.64	575	22.64	575	22.64	575	22.64	575	22.64	575
Y - Center of Gravity	17.06	433.4	16.78	426.3	24.87	631.7	22.46	570.4	22.35	567.7
X - Center of Gravity	12.11	307.6	11.9	302.2	11.74	298.2	11.62	295.1	11.52	292.6
Z - Center of Gravity	18.05	458.5	17.38	441.4	17.24	438	16.47	418.3	16.14	410
	lb	kg	lb	kg	lb	kg	lb	kg	lb	kg
Dry Weight	794	360.2	904	410.1	1014	459.9	1124	509.8	1235	560.2
Operating weight*	901.5	408.9	1036	470.1	1171	531	1305	591.8	1440	653.1

* operating weight based on water 8.33 lbs per gallon @ 60°F

Consult manual or main diemension drawings for other boiler dimensions

Boiler floor anchoring and leveling system [x4] replaces existing base frame (boiler) leveling bolts & Unisorb® vector anchor bolts [x4]

Teardrop ploymount – mounting detail with Unisorb® anchor bolt

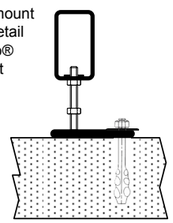

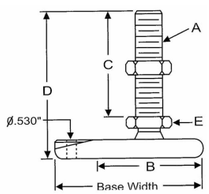

Teardrop Ploymount ™ MTNYLB44
Material Steel
Thread (A): M12 (0.47 In) ref.
Base Diameter (B):100 mm (3.93 In) ref.
Base Width: 138 mm (0.51 In) ref.
Thread Length (C): 102 mm (4.01 In) ref.
Total Height (D): 135 mm (5.31 In) ref.
Hex Size (E): 20 mm
Max. Load Capacity: 2270 lbs (1029.6 kg)
Weight: 0.6 lbs (0.27 kg)

Patent # US 6,742,750 B2
The base on this PolyMount™ makes it easier to drill for and install a lag bolt. The teardrop shape offsets the single lag hole to the outside of the boiler footprint. This offset provides the clearance necessary to drill the lag bolt hole without moving the machine. Use up to a 1/2" diameter lag bolt.

Anchor bolt [x4]

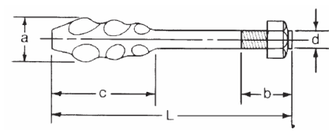

Unisorb® Vector Anchor bolt EM-12
Material: Forged Steel

A (anchor dia.) 24mm (1 In) ref.
B (Bolt thread length) 30mm (1 3/16") ref
C (anchor length): 70mm (2 ¾") ref.
D (thread dia.) M12 (0.47 In) ref.
L (overall length) 150mm (6 In) ref.
W Hex nut:19mm (¾") ref.

Drawing Template [0]

De Dietrich BOILERS
DDR Americas Inc.
1090 Fountain Street North, Unit 10 & 11
Cambridge, Ontario N3E 1A3 – Canada
Tel: 1.800.943.6275 Fax: 519.650.1709
Website: www.dedietrichboilers.com

Revisions

Date	Description	Initial

Description	De Dietrich Gas310 Eco series boiler – Center of gravity dimensions and boiler anchoring points for seismic zoning				
Creator	CJH	Tolerances ±		Material	Mixed (cast aluminum, steel)
Approved		Scale	3 in = 1 ft.	File Name	9-310-COG-001(a)
Revision	0	Units		Date [mm/dd/yy]	10/30/08

G310E 006 v1.0 05/2010

Boiler floor anchoring and leveling system [x4] replaces existing base frame (boiler) leveling bolts & Unisorb® vector anchor bolts [x4]

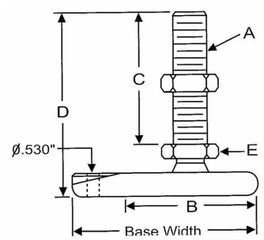

Teardrop Ploymount ™ MTNYLB44
Material Steel
Thread (A): M12 (0.47 In) ref.
Base Diameter (B):100 mm (3.93 In) ref.
Base Width: 138 mm (0.51 In) ref.
Thread Length (C): 102 mm (4.01 In) ref.
Total Height (D): 135 mm (5.31 In) ref.
Hex Size (E): 20 mm
Max. Load Capacity: 2270 lbs (1029.6 kg)
Weight: 0.6 lbs (0.27 kg)

Patent # US 6,742,750 B2
The base on this PolyMount™ makes it easier to drill for and install a lag bolt. The teardrop shape offsets the single lag hole to the outside of the boiler footprint. This offset provides the clearance necessary to drill the lag bolt hole without moving the machine. Use up to a 1/2" diameter lag bolt.

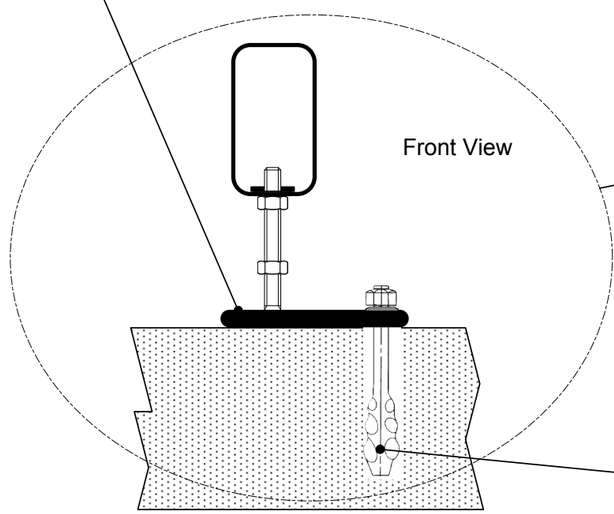

Side view frame mounting support view

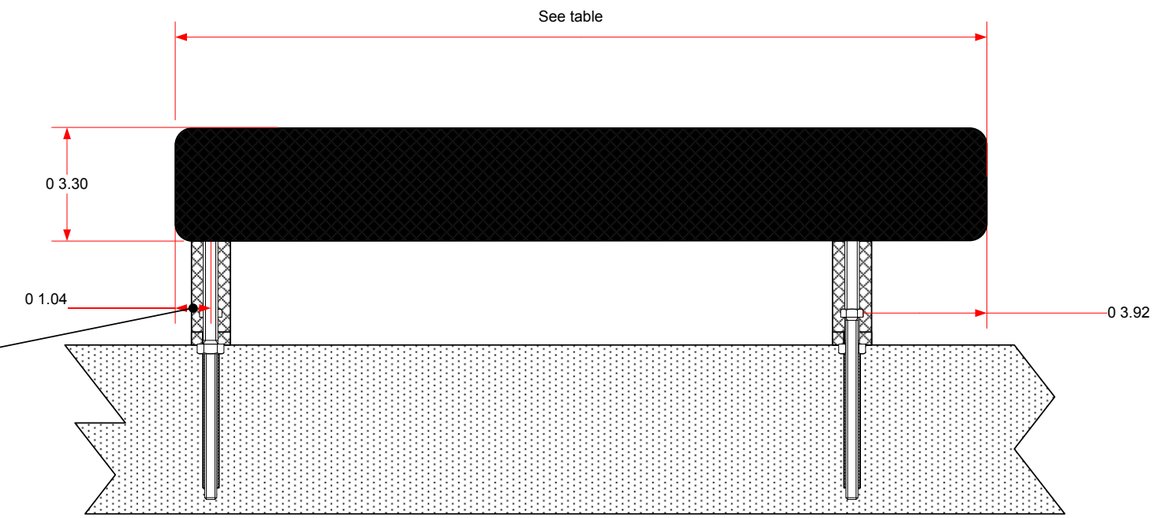

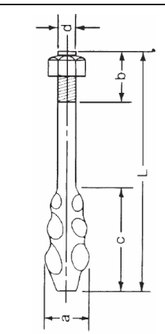

Anchor bolt [x4]

Teardrop ploymount – mounting detail with Unisorb® anchor bolt

Unisorb® Vector Anchor bolt EM-12
Material: Forged Steel

A (anchor dia.) 24mm (1 In) ref.
B (Bolt thread length) 30mm (1 3/16") ref
C (anchor length): 70mm (2 ¾") ref.
D (thread dia.) M12 (0.47 In) ref.
L (overall length) 150mm (6 In) ref.
W Hex nut:19mm (¾") ref.

G310E 006 v1.0 05/2010

Drawing Template [0]

De Dietrich BOILERS
DDR Americas Inc.
1090 Fountain Street North, Unit 10 & 11
Cambridge, Ontario N3E 1A3 – Canada
Tel: 1.800.943.6275 Fax: 519.650.1709
Website: www.dedietrichboilers.com

Revisions		
Date	Description	Initial

Description	De Dietrich Gas310 Eco series boiler – Boiler legs and anchor bolt details for seismic zoning				
Creator	CJH	Tolerances ±		Material	Mixed (cast aluminum, steel)
Approved		Scale	3 in = 1 ft.	File Name	9-310-COG-001(b)
Revision	0	Units		Date [mm/dd/yy]	10/30/08